REVISIONS				
ZONE	LTR	DESCRIPTION	DATE	APPROVED
	1	PRELIM RELEASE	2015/11/18	

NOTES (UNLESS OTHERWISE SPECIFIED):

1. REFER TO MESA-X-EVU MANUAL FOR ELECTRICAL SPECIFICATIONS, CONNECTIONS, AND CONTROL INFORMATION.
2. REFERENCE AXIS FOR ANTENNA CONTROL COORDINATES.
   Ex - POSITIVE THETA, POSITIVE PHI POINTS TO UPPER LEFT QUADRANT
3. TORQUE 10-32 BOLTS INTO RIVET-NUTS FOUR PLACES TO 20 IN-LBS [2.3 KGF*M] MAXIMUM.
4. WEIGHT 6.6 LBS [3.0 KG] WITH PACKAGE, 3.1 LBS [1.4 KG] WITHOUT PACKAGE.
5. CONVECTION COOLING THROUGH ALUMINUM 6061-T6 BACK PLATE.
6. MOISTURE TOLERANT PACKAGE.
7. COMMERCIAL EVALUATION UNIT - SPECIFICATIONS AND DRAWINGS SUBJECT TO CHANGE WITHOUT NOTICE.

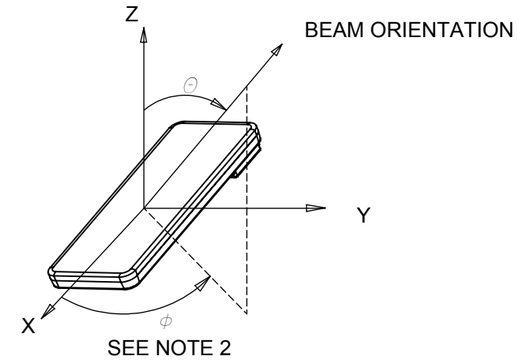

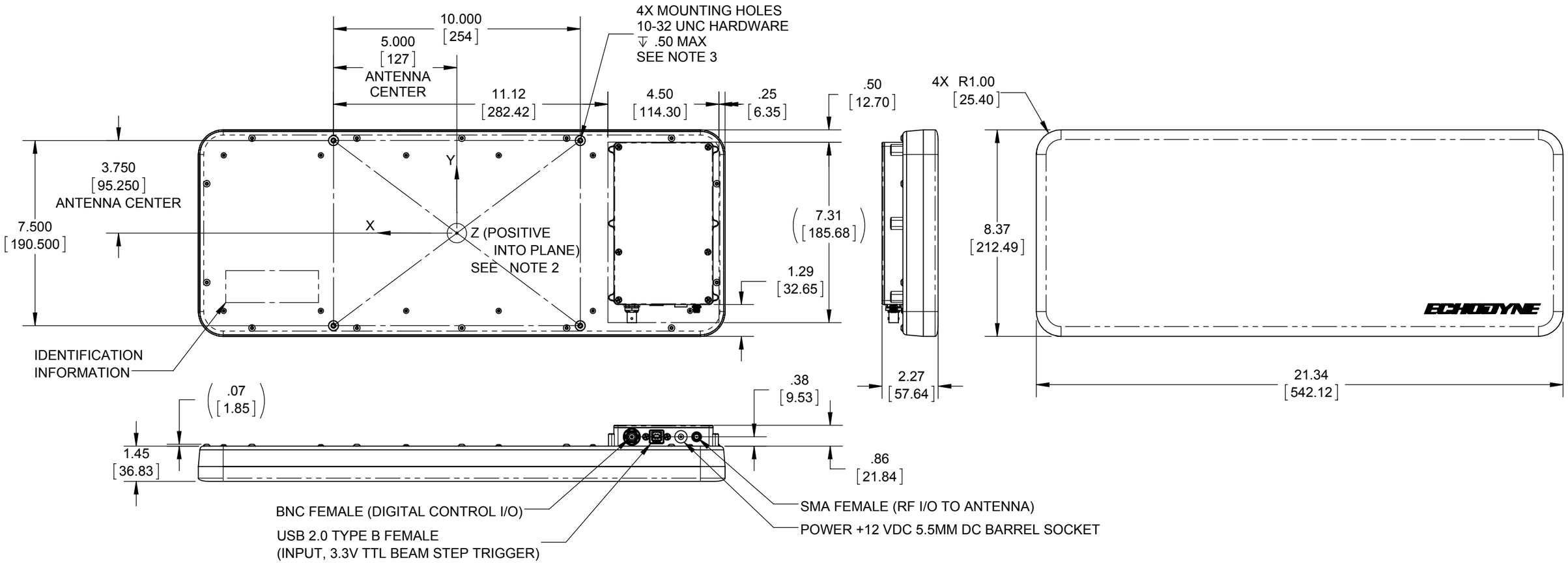

DESTRUCTION NOTICE - DESTROY DOCUMENTS BY ANY METHOD THAT WILL PREVENT DISCLOSURE OF CONTENTS OR RECONSTRUCTION OF THE DOCUMENT.

DASH NO.	NEXT ASSEMBLY	USED ON	N/A	U/O
			QTY REQ	

APPLICATION

DIMENSIONS ENCLOSED IN BRACKETS [ ] ARE EXPRESSED IN MILLIMETERS.

THIRD ANGLE PROJECTION

UNLESS OTHERWISE SPECIFIED, TOLERANCES ON MILLIMETERS ARE:

2 PLACE DIM.	3 PLACE DIM.	4 PLACE DIM.
1.27 MM	0.51 MM	BASIC

TOLERANCE
UNLESS OTHERWISE SPECIFIED

2 PLACE DIM.	3 PLACE DIM.	4 PLACE DIM.
±.05	±.020	BASIC

ANGLES ±1°
SURFACE FINISH MACHINED ✓

ALL DIMENSIONS ARE IN INCHES AND DO NOT INCLUDE APPLIED FINISH.

EXCEPT AS MAY BE OTHERWISE PROVIDED BY CONTRACT, THIS DOCUMENT IS THE PROPERTY OF THE ECHODYNE CORPORATION. IF RELEASED TO OTHER SOURCES, IT SHALL BE RECEIVED BY SUCH SOURCES IN TOTAL CONFIDENCE AND SHALL NOT BE REPRODUCED COPIED, RELEASED TO ANY THIRD PARTY OR PARTIES, NOR USED FOR MANUFACTURE OR SALE OF THE ARTICLES WITHOUT PRIOR WRITTEN AUTHORIZATION.

REMOVE BURRS & SHARP EDGES
0.005/0.015 RAD INSIDE CORNERS
0.005/0.010X45° OUTSIDE EDGES

CONCENTRICITY - .005 T.I.R.

PERPENDICULARITY - .003.IN/.IN

PARALLELISM - .003.IN/.IN

QTY REQ'D	CODE INDENT	DWG SIZE	PART OR IDENTIFYING NO.	NOMENCLATURE OR DESCRIPTION	ITEM NO.

LIST OF MATERIALS

DRAWING PER Y14.100M
DIMENSIONING PER ANSI Y14.5

MATERIAL
N/A

FINISH
N/A

CONTRACT NO.

DRAWN	R. EAGLESTONE	20151118
CHECK	B. GRAVES	20151118
PROJ. ENG.		
Q.A.		

ECHODYNE
2380 116th Ave. NE Bellevue, WA 98004-3036
www.echodyne.com

TITLE
INTERFACE CONTROL DWG
MESA-X-EVU-G1

SIZE	CAGE NO.	DWG NO.	REV
B	7DG42	700-0002-201	1

SCALE FULL SHT 1 OF 1